PSW INLET
(CHECK TYPE TO BE USED)

____PROJECTING INLET
____HOOD INLET
(SEE WV-ENG-11, OR
TSC-NE-ENG-622)
____CANOPY INLET
(SEE WV-ENG-12)

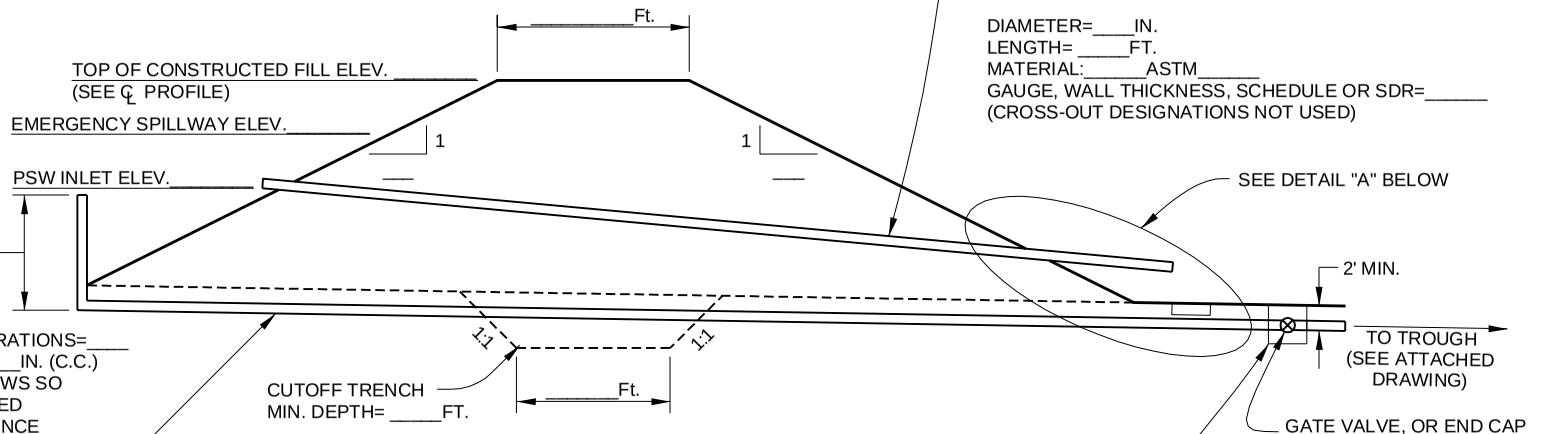

PSW PIPE

DIAMETER=____IN.
LENGTH= _____FT.
MATERIAL:_____ASTM_____
GAUGE, WALL THICKNESS, SCHEDULE OR SDR=_____
(CROSS-OUT DESIGNATIONS NOT USED)

SEE DETAIL "A" BELOW

STANDPIPE

LENGTH= _____FT.
DIA. PERFORATIONS=____IN.
NO. VERTICAL ROWS OF PERFORATIONS=____
SPACING OF PERFORATIONS=____IN. (C.C.)
STAGGER PERFORATIONS IN ROWS SO
PERFORATIONS ARE NOT ALIGNED
AROUND THE PIPE CIRCUMFERENCE

CUTOFF TRENCH
MIN. DEPTH= _____FT.

GATE VALVE, OR END CAP
WHEN TROUGH IS NOT USED

WATER SUPPLY OR DRAIN PIPE

DIAMETER=____IN.
LENGTH= _____FT.
MATERIAL:_____ASTM_____
GAUGE, WALL THICKNESS, SCHEDULE OR SDR=_____
(CROSS-OUT DESIGNATIONS NOT USED)

VALVE BOX WITH LID
(PIPE SECTION, METER PIT, MASONRY
CONCRETE, PRESSURE PRESERVATIVE
TREATED WOOD OR EQUIVALENT)

TYPICAL CROSS SECTION OF POND

(SEE PLAN VIEW FOR ACTUAL LOCATION AND
ALIGNMENT OF PIPES)
(ADD SEEPAGE CONTROL DETAILS IF REQUIRED)

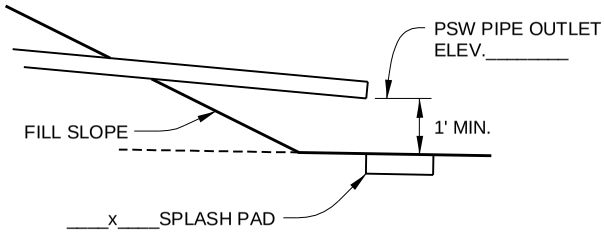

SPLASH PAD REQUIRED WHEN
10" ≤ PIPE DIA. < 15"; AND
RECOMMENDED WHEN PIPE DIA.< 10"
SPLASH PAD MAY BE 12" DEEP ROCK
RIPRAP (3" TO 9" STONE), OR 4" THICK
CONCRETE W/ 6"x 6"- 10 GAUGE WIRE
REINFORCEMENT AT THE CENTER.

DETAIL A - PSW OUTLET

(FOR PONDS WITH PSW PIPES LESS THAN 15" DIA.)

NOTE: WHEN THE PSW PIPE DIA. ≥ 15",
SEE WV-ENG-16 OR WV-ENG-17

ESTIMATED QUANTITIES

ITEM		UNIT	QUANTITY
EARTH FILL - EMBANKMENT		CU.YD.	
PSW PIPE		FT.	
WATER SUPPLY OR DRAIN PIPE		FT.	
FENCE		ROD	
RIPRAP		TON	
CONCRETE		CU.YD.	
	RATE/AC.		
FERTILIZER ____-____-____		LB.	
LIME		TON	
MULCH		TON	
SEED (TYPE _____)		TON	

UTILITY INFORMATION:
"THE NATURAL RESOURCES CONSERVATION SERVICE MAKES NO REPRESENTATION AS TO THE EXISTENCE OR NON-EXISTENCE OF ANY UTILITIES AT THE CONSTRUCTION SITE. SHOWN ON THESE CONSTRUCTION DRAWINGS ARE THOSE UTILITIES WHICH HAVE BEEN IDENTIFIED. IT IS THE RESPONSIBILITY OF THE LANDOWNERS OR OPERATORS AND CONTRACTORS TO ASSURE THEMSELVES THAT NO HAZARD EXISTS OR DAMAGE WILL OCCUR TO UTILITIES."

FARM POND WITH STRAIGHT INLET

Job Approval Class: _____
Cooperator: _____
Address: _____
Designed By: _____ Date: _____
Checked By: _____ Date: _____
Approved By: _____ Date: _____
Constr. Check: _____ Date: _____